Fatigue life or lifetime prediction already?
Computer Aided fatigue prediction for product optimization and failure avoidance
A comparison of different regulations

Wolfgang Krach, Nikolaus Friedl
CAE Simulation & Solutions GmbH

Motivation = CAE business

- CAE Simulation & Solutions
  - Simulation Services
    - Founded 2003
  - > 1000 projects
  - 16+ people
  - FEM / CFD / Software

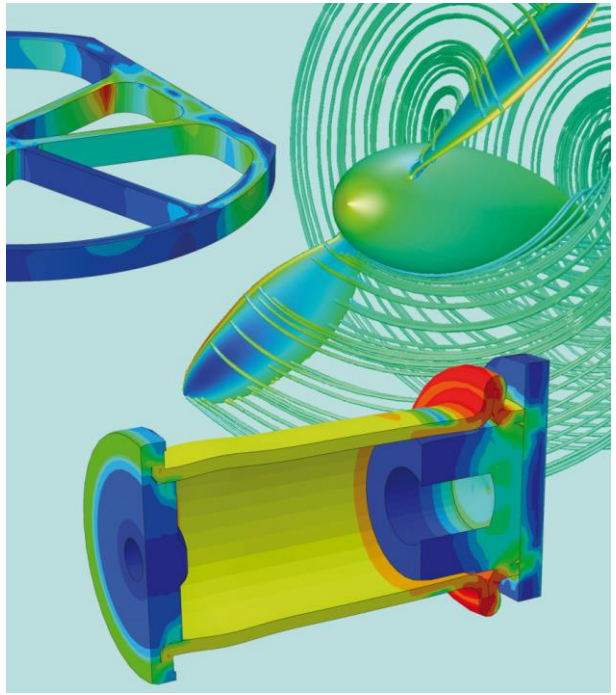

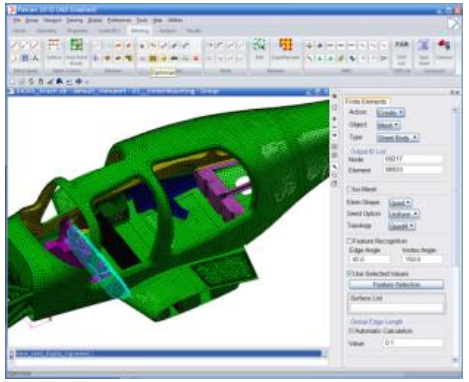

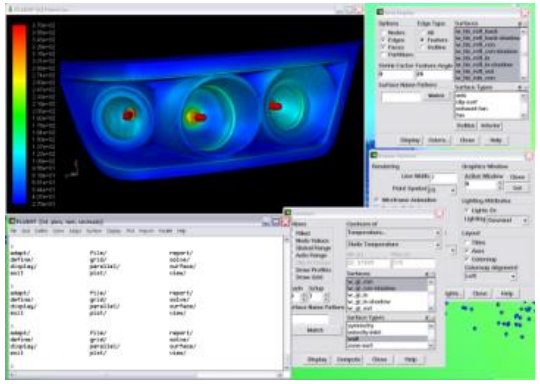

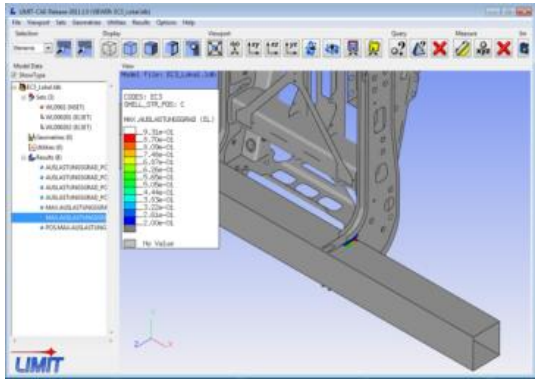

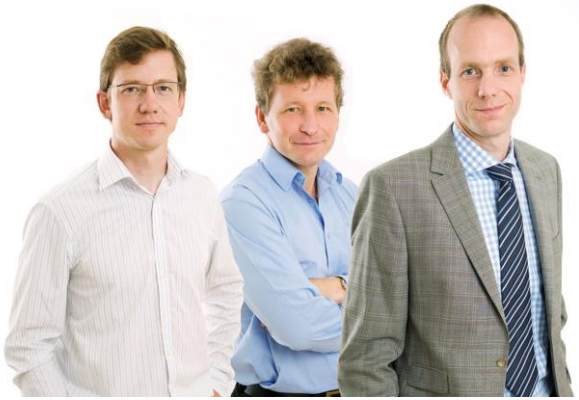

Motivation

- Ongoing discussion with project partners and supervisors in R&D projects
  - Safety factors
  - Loading situation
  - Material properties
    - Allowables

Infinite life fatigue	Finite life fatigue
Fatigue limit	Fatigue strength
Endurance limit	Endurance strength
Dauerfestigkeit	Betriebsfestigkeit

- Importance of making the right decisions at the beginning of the project
- Avoid Failures

Motivation

- Safe material
  - Use high strength materials (steel)

- Safe production cost
  - Welding time
  - Tooling time …

- Predict Life time
  - Renewal / service time

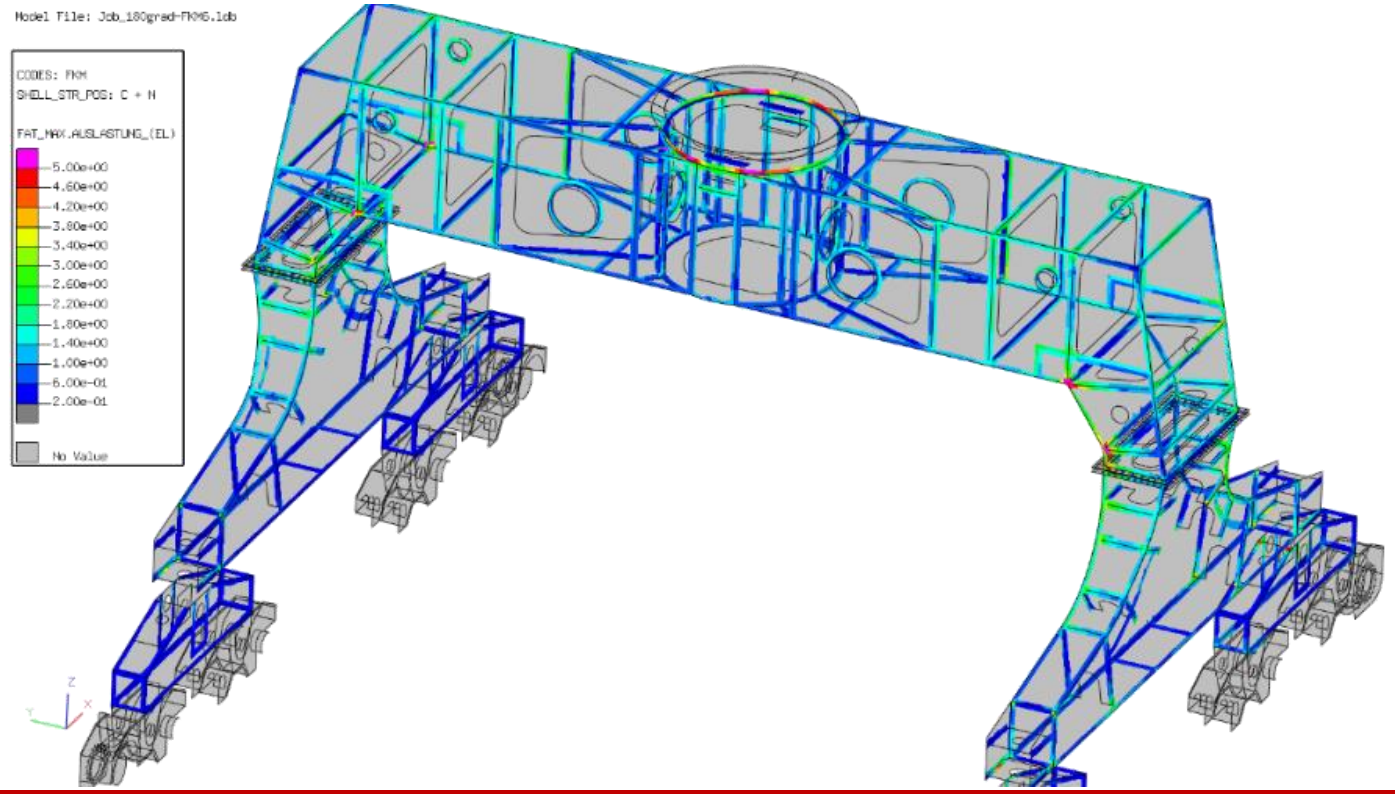

Example railway bogie

- DV952
- EC3

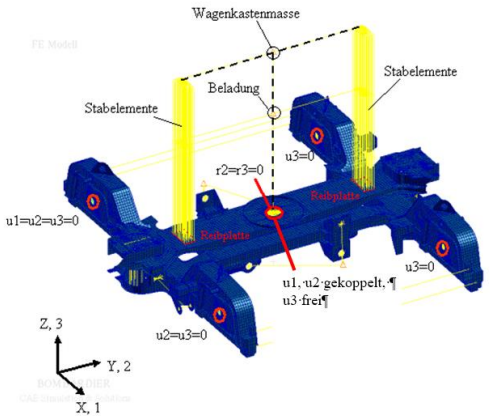

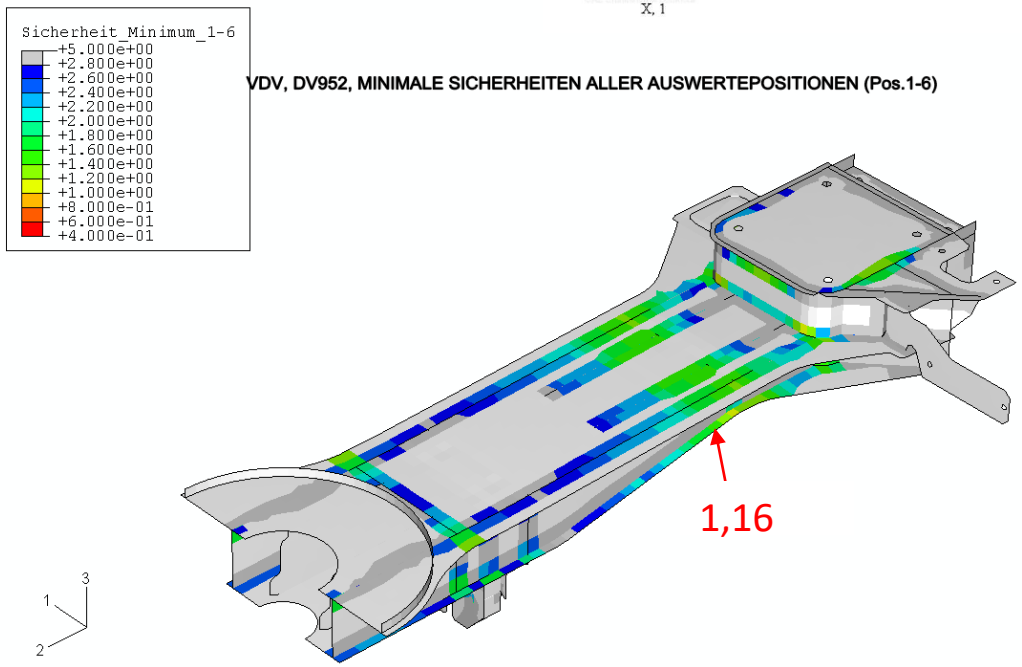

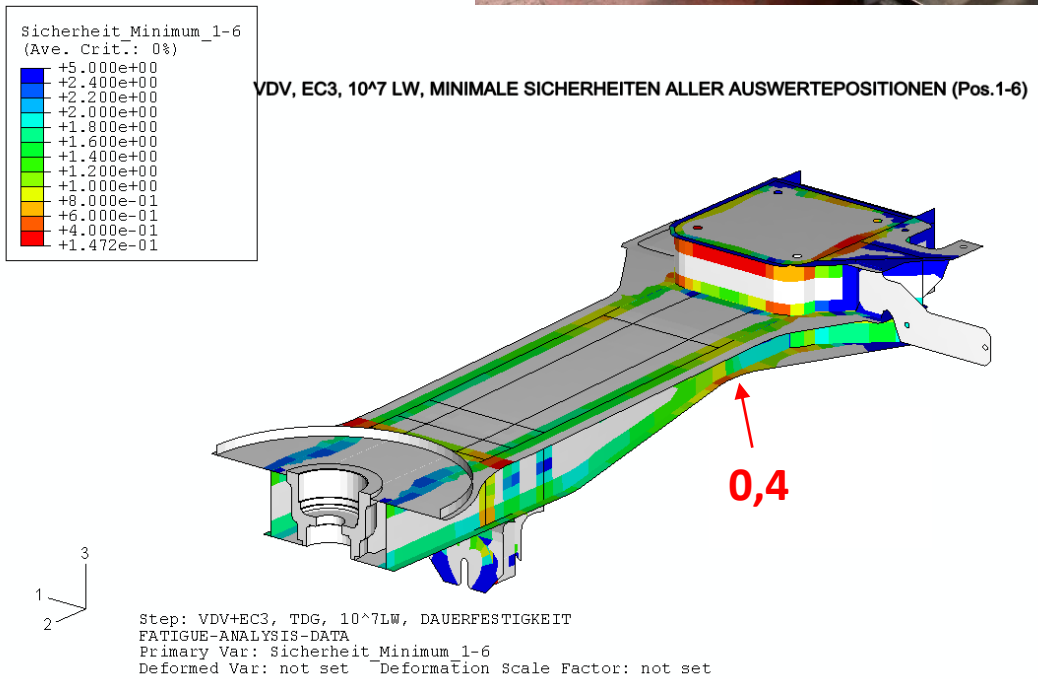

Example railway bogie

DV952	EC3
Safety factor 1,5 Mat. allowables	Safety factor to choose
N = 2*10^6	N = 1*10^7

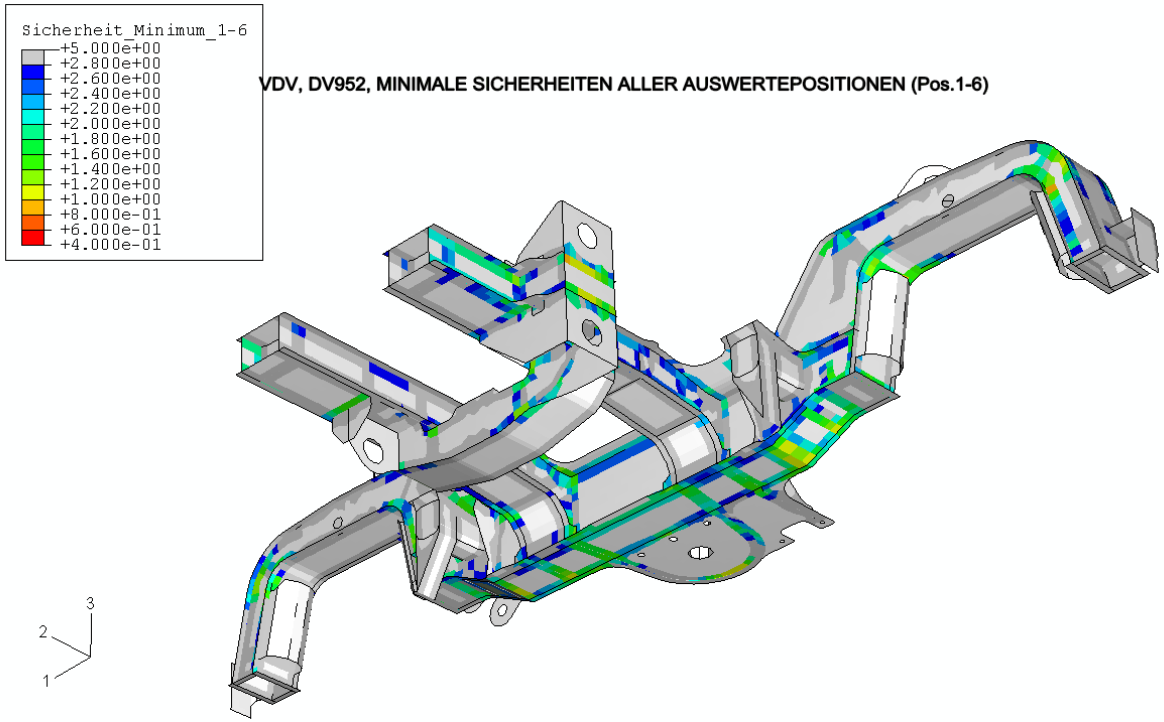

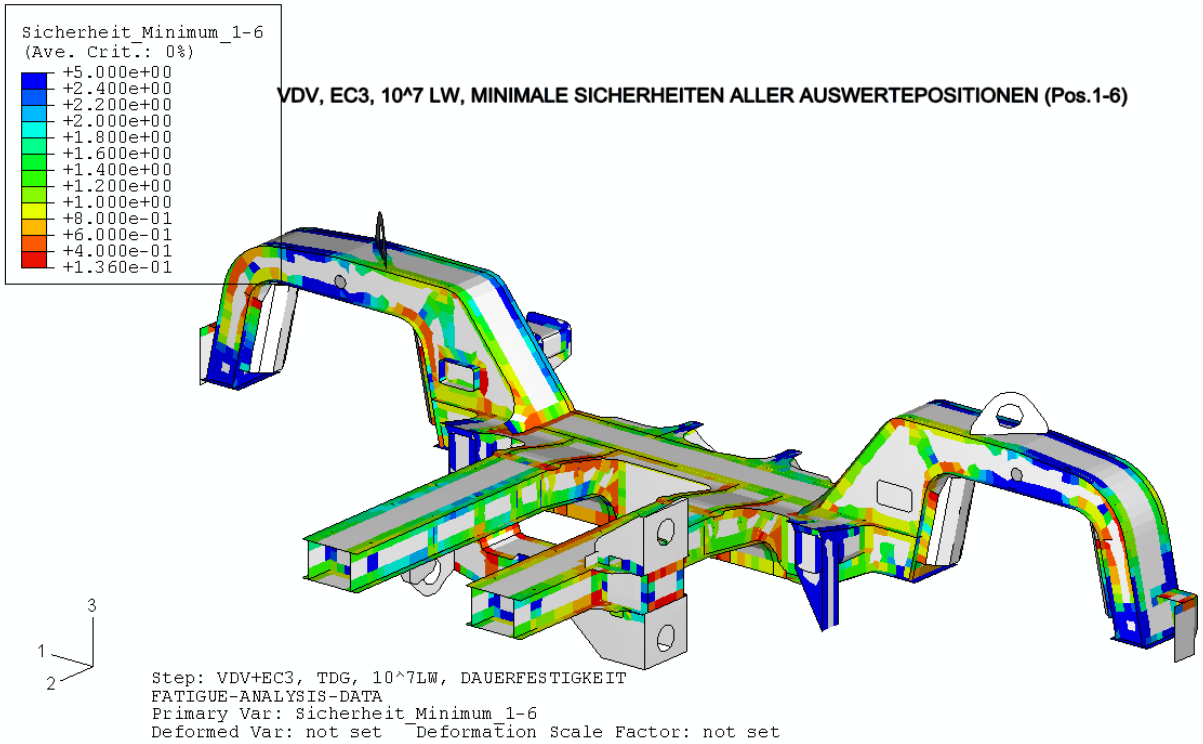

EC3

- EC3
  - Includes safety concept / Partial safety factors
    - Material
    - Usage
  - Static + Fatigue

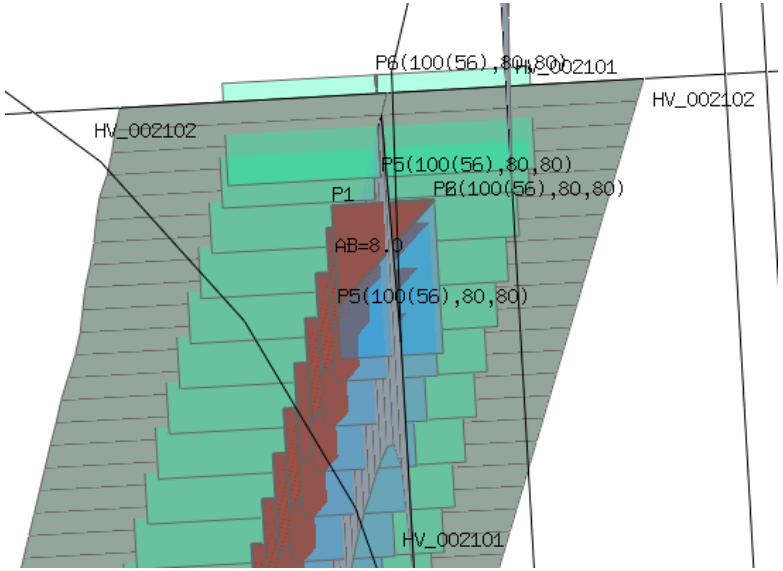

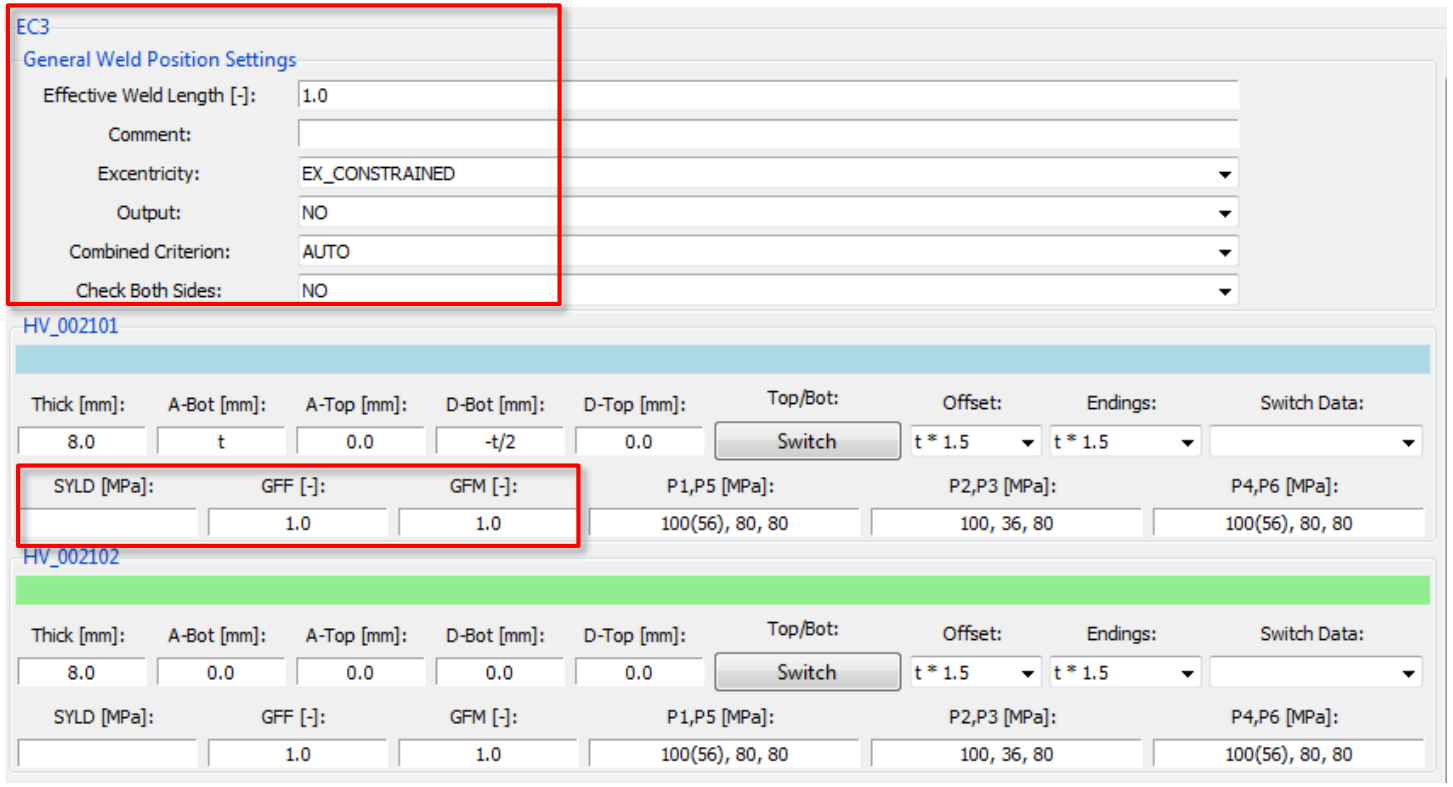

EC3

General Weld Position Settings

Effective Weld Length [-]:	1.0
Comment:	
Excentricity:	EX_CONSTRAINED
Output:	NO
Combined Criterion:	AUTO
Check Both Sides:	NO

HV_002101

Thick [mm]:	A-Bot [mm]:	A-Top [mm]:	D-Bot [mm]:	D-Top [mm]:	Top/Bot:	Offset:	Endings:	Switch Data:
8.0	t	0.0	-t/2	0.0	Switch	t * 1.5	t * 1.5	

SYLD [MPa]:	GFF [-]:	GFM [-]:	P1,P5 [MPa]:	P2,P3 [MPa]:	P4,P6 [MPa]:
	1.0	1.0	100(56), 80, 80	100, 36, 80	100(56), 80, 80

HV_002102

Thick [mm]:	A-Bot [mm]:	A-Top [mm]:	D-Bot [mm]:	D-Top [mm]:	Top/Bot:	Offset:	Endings:	Switch Data:
8.0	0.0	0.0	0.0	0.0	Switch	t * 1.5	t * 1.5	

SYLD [MPa]:	GFF [-]:	GFM [-]:	P1,P5 [MPa]:	P2,P3 [MPa]:	P4,P6 [MPa]:
	1.0	1.0	100(56), 80, 80	100, 36, 80	100(56), 80, 80

DIN15018 - Kranbaunorm

- DIN15018 – Kranbaunorm
  - Infinite life fatigue

    (Finite life fatigue)

    (Beanspruchung B6)

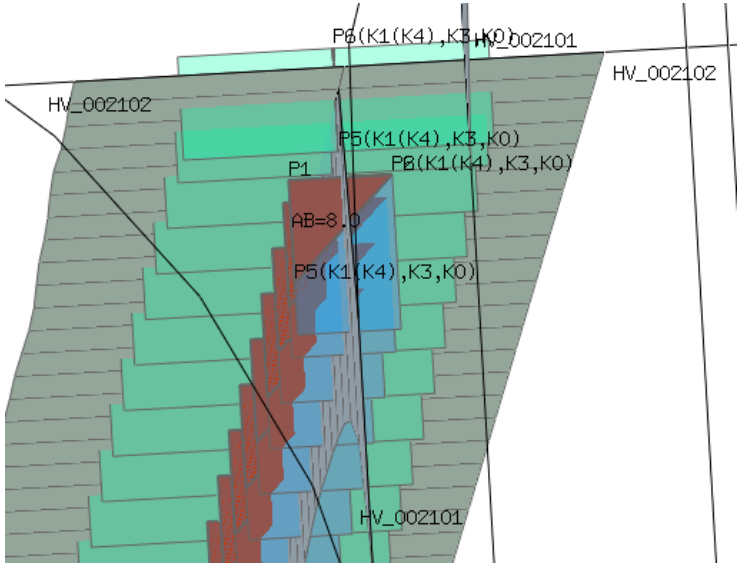

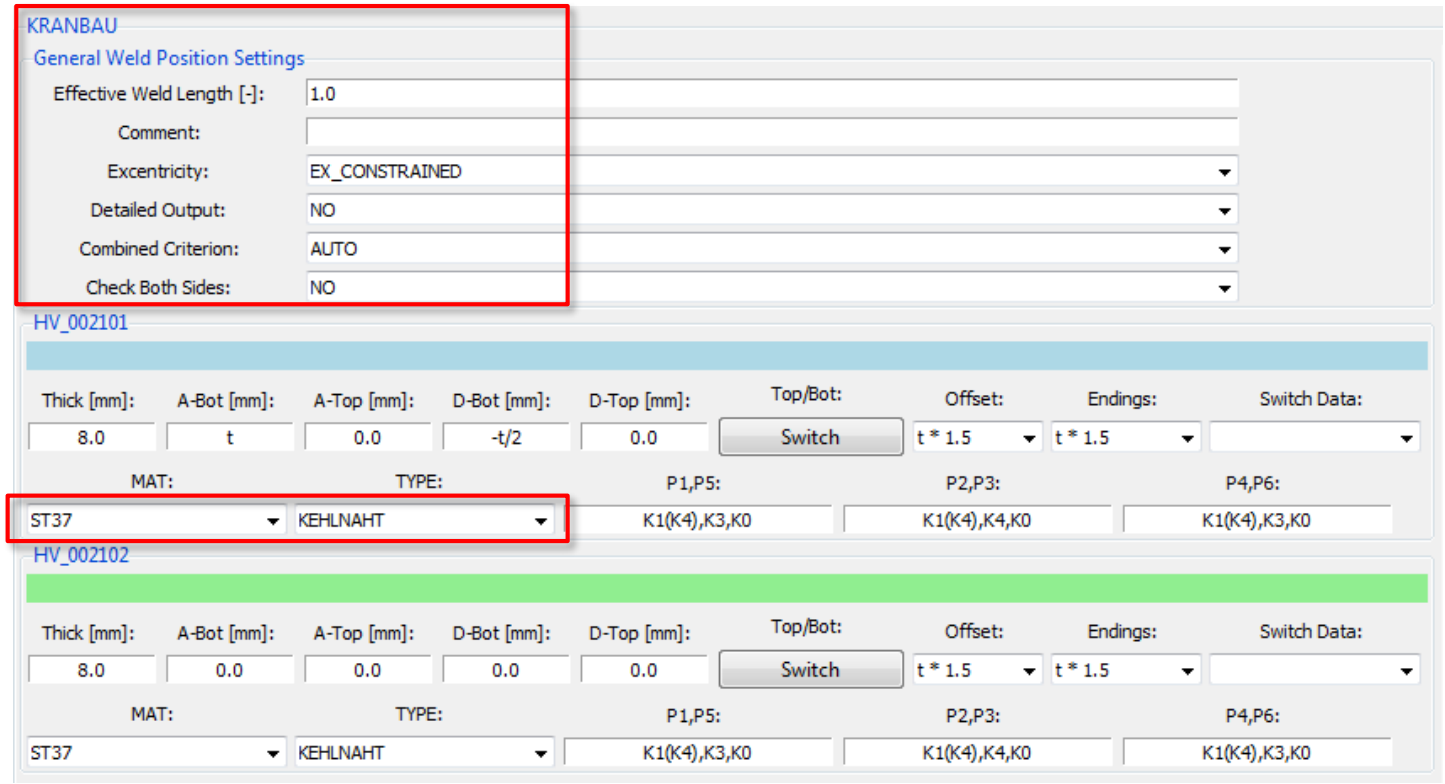

EN13001 - cranes

- EN13001 - cranes

General

Use Sensor:	☐
Assignment:	Weld
Code:	EN13001
Assessment:	STATIC_OR_FATIGUE
Status:	Edited

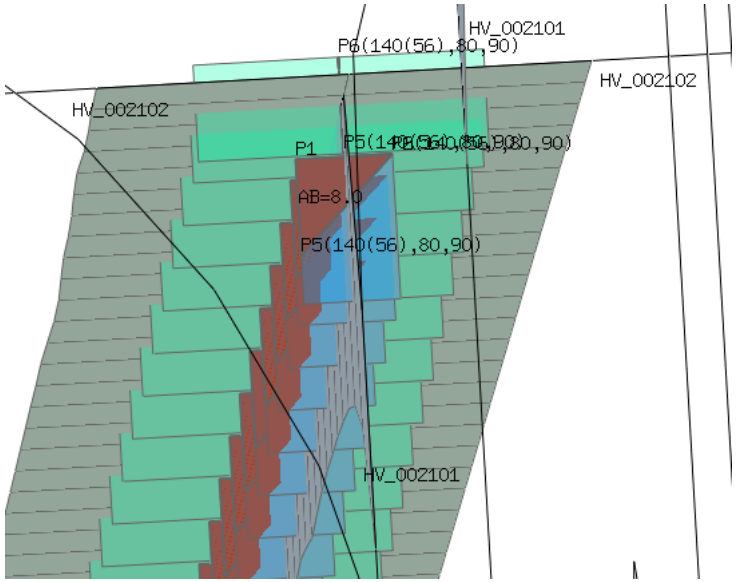

EN13001

General Weld Position Settings

Effective Weld Length [-]:	1.0
Comment:	
Excentricity:	EX_CONSTRAINED
Detailed Output:	NO
Combined Criterion:	AUTO
Check Both Sides:	NO
General resistance fact., gm [-]:	1.1
Res. fact. in plane, gsm [-]:	0.95
Res. fact. perp., gsm_perp [-]:	1.5
Resistance fact. fatigue,gmf [-]:	1.25
Yield strength mat.,fyw [MPa]:	195
Ult. strength mat.,fuw [MPa]:	340
Static parallel stress in weld:	YES

HV_002101

Thick [mm]:	A-Bot [mm]:	A-Top [mm]:	D-Bot [mm]:	D-Top [mm]:	Top/Bot:	Offset:	Endings:	Switch Data:
8.0	t	0.0	-t/2	0.0	Switch	t * 1.5	t * 1.5	

Material:	P1,P5 [MPa]:	P2,P3 [MPa]:	P4,P6 [MPa]:
S235_EN_10025-2	140(56),80,90	140,45,90	140(56),80,90

S/N Slope:	P1,P5,m [-]:	P2,P3,m [-]:	P4,P6,m [-]:
	3(3),3,5	3,3,5	3(3),3,5

HV_002102

Thick [mm]:	A-Bot [mm]:	A-Top [mm]:	D-Bot [mm]:	D-Top [mm]:	Top/Bot:	Offset:	Endings:	Switch Data:
8.0	0.0	0.0	0.0	0.0	Switch	t * 1.5	t * 1.5	

Material:	P1,P5 [MPa]:	P2,P3 [MPa]:	P4,P6 [MPa]:
S235_EN_10025-2	140(56),80,90	140,45,90	140(56),80,90

S/N Slope:	P1,P5,m [-]:	P2,P3,m [-]:	P4,P6,m [-]:
	3(3),3,5	3,3,5	3(3),3,5

DVS1612

- DVS1612
  - Combine with EN12663

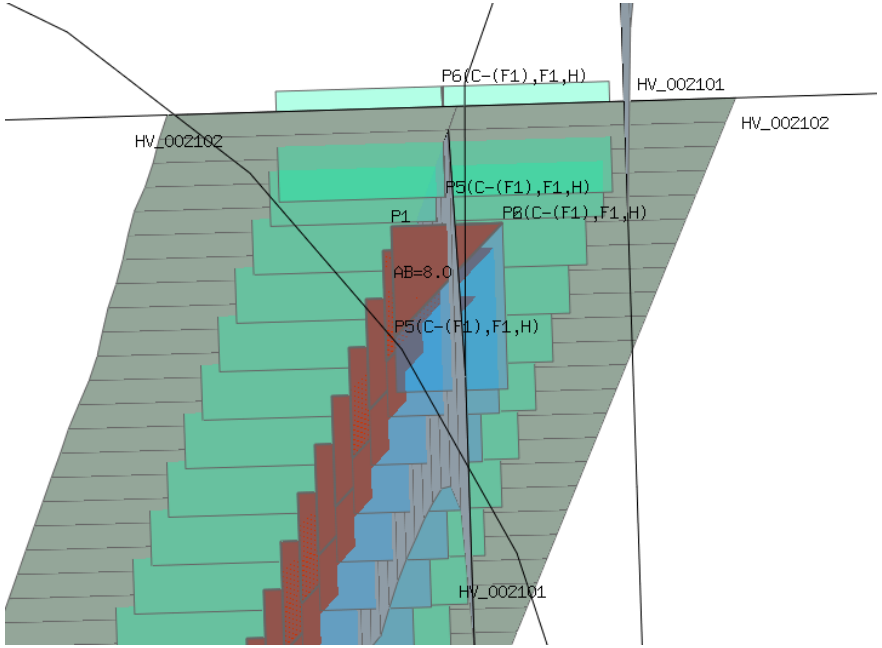

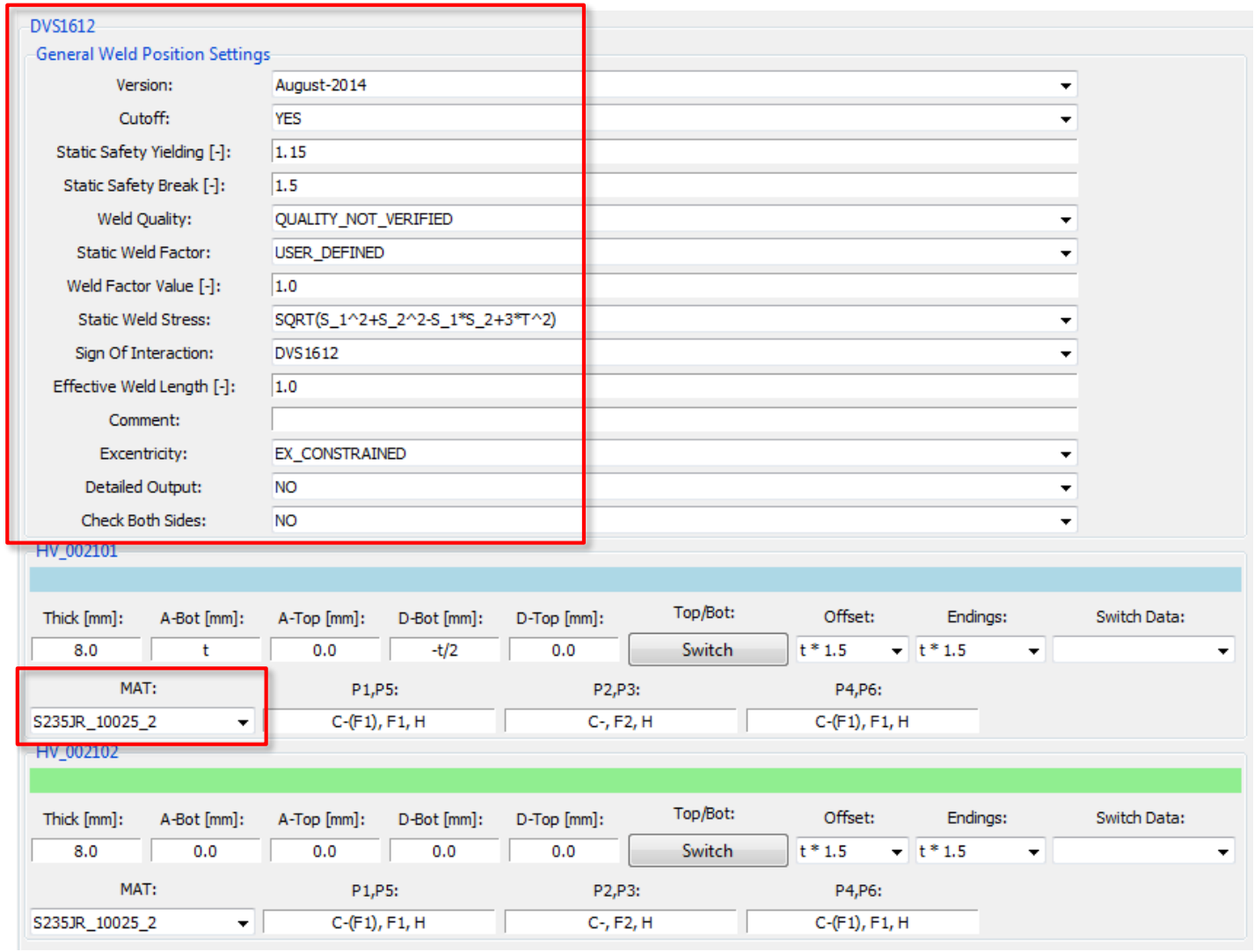

DVS1612

General Weld Position Settings

Version:	August-2014
Cutoff:	YES
Static Safety Yielding [-]:	1.15
Static Safety Break [-]:	1.5
Weld Quality:	QUALITY_NOT_VERIFIED
Static Weld Factor:	USER_DEFINED
Weld Factor Value [-]:	1.0
Static Weld Stress:	SQRT(S_1^2+S_2^2-S_1*S_2+3*T^2)
Sign Of Interaction:	DVS1612
Effective Weld Length [-]:	1.0
Comment:	
Excentricity:	EX_CONSTRAINED
Detailed Output:	NO
Check Both Sides:	NO

HV_002101

Thick [mm]:	A-Bot [mm]:	A-Top [mm]:	D-Bot [mm]:	D-Top [mm]:	Top/Bot:	Offset:	Endings:	Switch Data:
8.0	t	0.0	-t/2	0.0	Switch	t * 1.5	t * 1.5	

MAT:	P1,P5:	P2,P3:	P4,P6:
S235JR_10025_2	C-(F1), F1, H	C-, F2, H	C-(F1), F1, H

HV_002102

Thick [mm]:	A-Bot [mm]:	A-Top [mm]:	D-Bot [mm]:	D-Top [mm]:	Top/Bot:	Offset:	Endings:	Switch Data:
8.0	0.0	0.0	0.0	0.0	Switch	t * 1.5	t * 1.5	

MAT:	P1,P5:	P2,P3:	P4,P6:
S235JR_10025_2	C-(F1), F1, H	C-, F2, H	C-(F1), F1, H

FKM 6th edition

- FKM Guideline
  - Static assessment
  - Fatigue assessment
  - static safety factor
  - Material safety factor Fatigue assessment

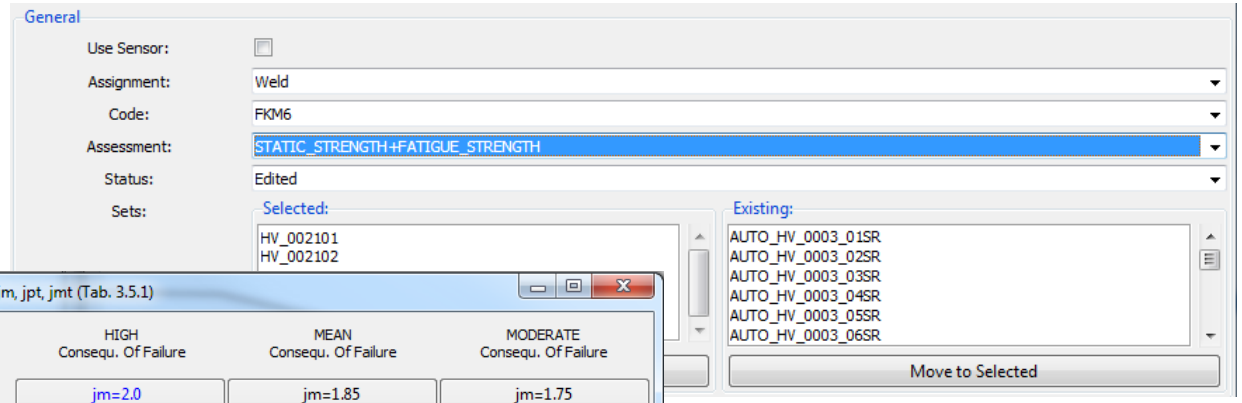

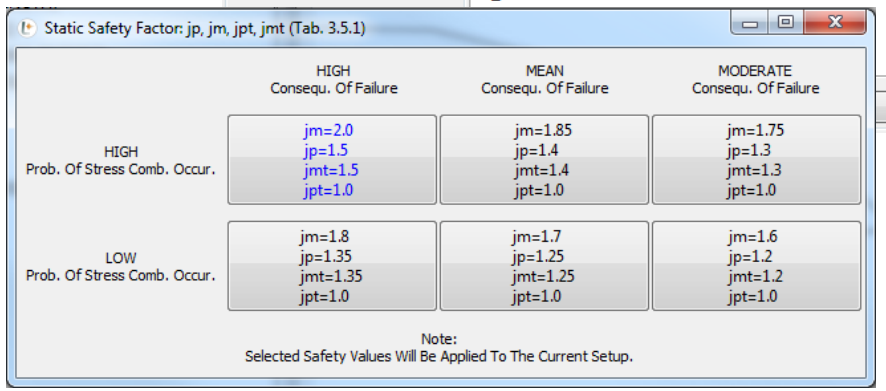

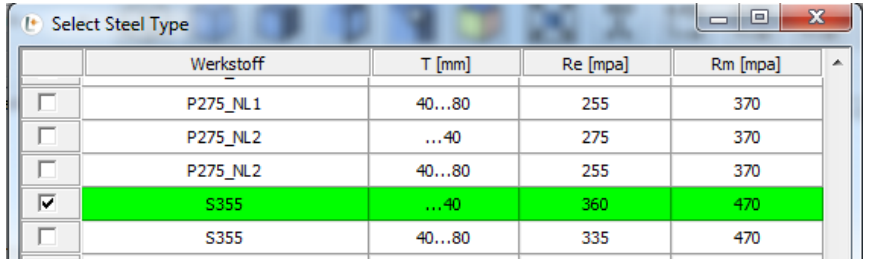

Werkstoff	T [mm]	Re [mpa]	Rm [mpa]
P275_NL1	40…80	255	370
P275_NL2	…40	275	370
P275_NL2	40…80	255	370
S355	…40	360	470
S355	40…80	335	470

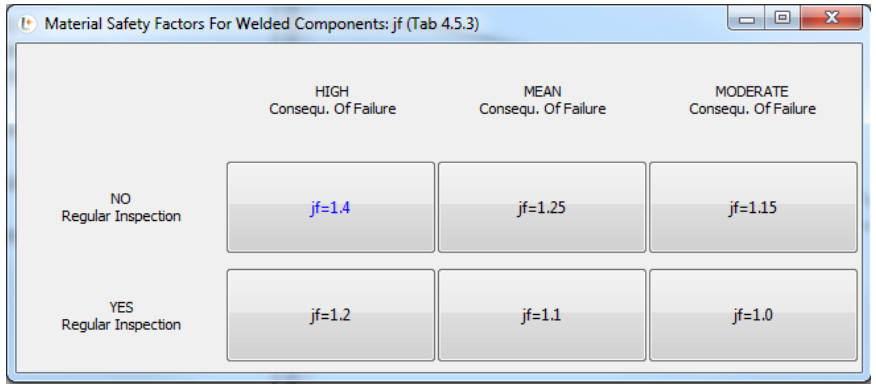

FKM 6th edition

- FKM Guideline Options
  - Material Group
  - Plastic notch factor Kp
  - Operating Time
  - Safety values

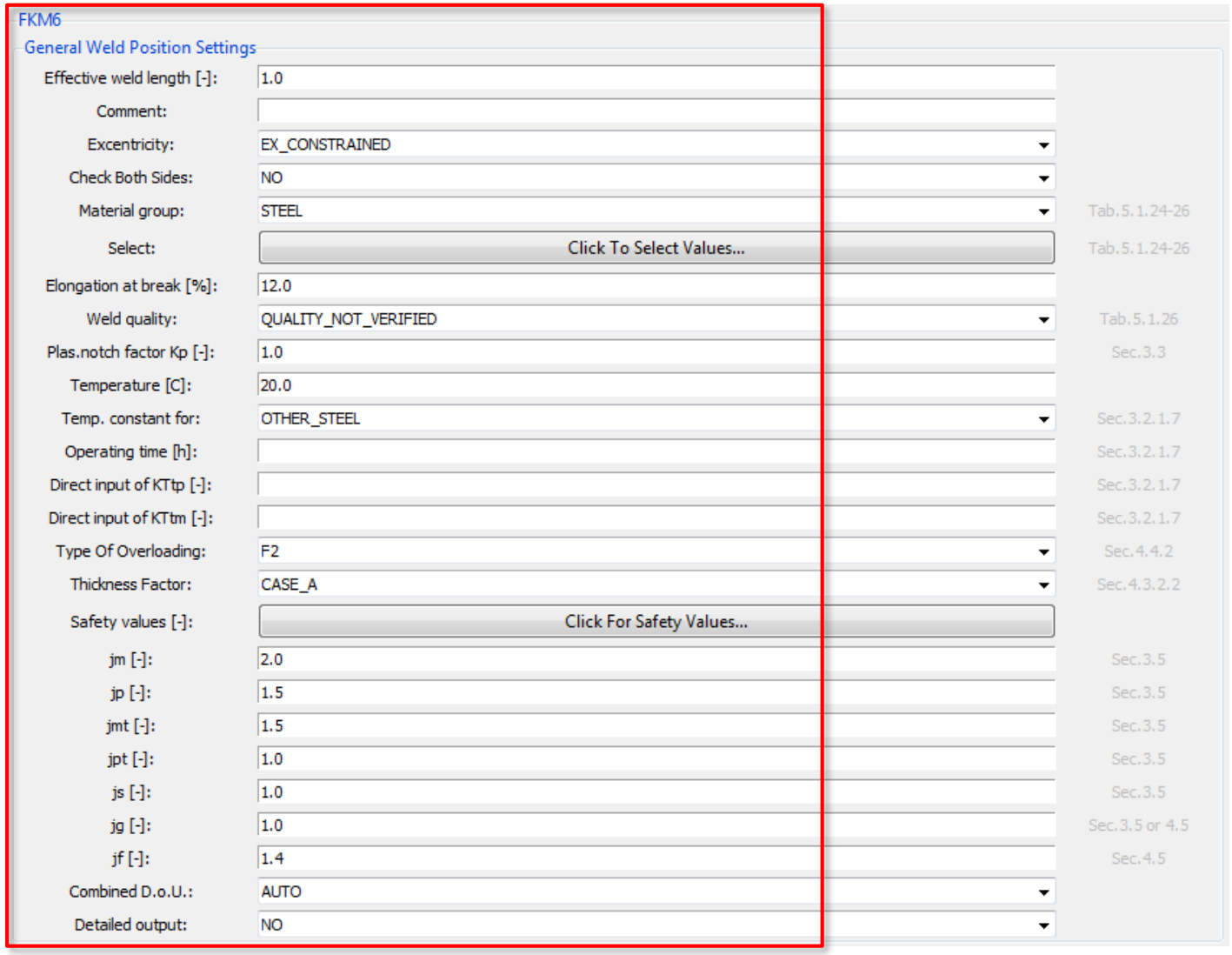

FKM6

General Weld Position Settings

Effective weld length [-]:	1.0	
Comment:		
Excentricity:	EX_CONSTRAINED	
Check Both Sides:	NO	
Material group:	STEEL	Tab.5.1.24-26
Select:	Click To Select Values...	Tab.5.1.24-26
Elongation at break [%]:	12.0	
Weld quality:	QUALITY_NOT_VERIFIED	Tab.5.1.26
Plas.notch factor Kp [-]:	1.0	Sec.3.3
Temperature [C]:	20.0	
Temp. constant for:	OTHER_STEEL	Sec.3.2.1.7
Operating time [h]:		Sec.3.2.1.7
Direct input of KTtp [-]:		Sec.3.2.1.7
Direct input of KTtm [-]:		Sec.3.2.1.7
Type Of Overloading:	F2	Sec.4.4.2
Thickness Factor:	CASE_A	Sec.4.3.2.2
Safety values [-]:	Click For Safety Values...	
jm [-]:	2.0	Sec.3.5
jp [-]:	1.5	Sec.3.5
jmt [-]:	1.5	Sec.3.5
jpt [-]:	1.0	Sec.3.5
js [-]:	1.0	Sec.3.5
jg [-]:	1.0	Sec.3.5 or 4.5
jf [-]:	1.4	Sec.4.5
Combined D.o.U.:	AUTO	
Detailed output:	NO	

FKM 6th edition

- FKM Guideline

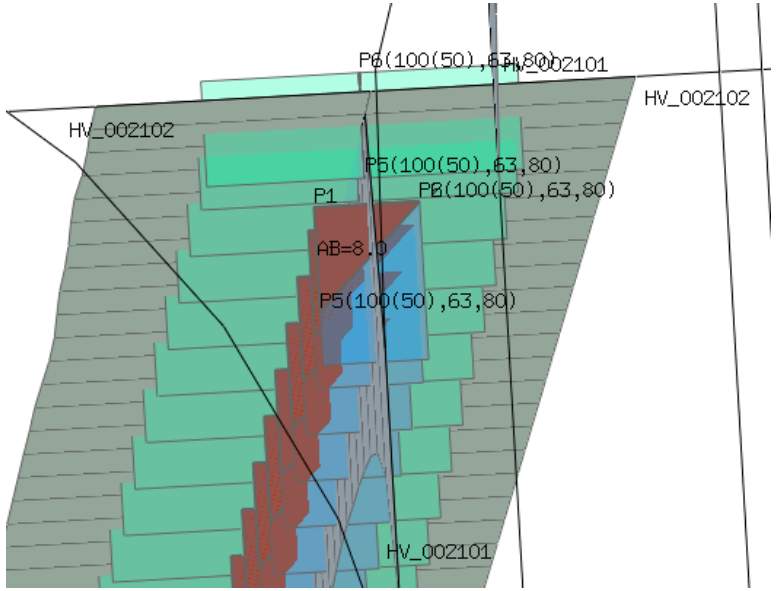

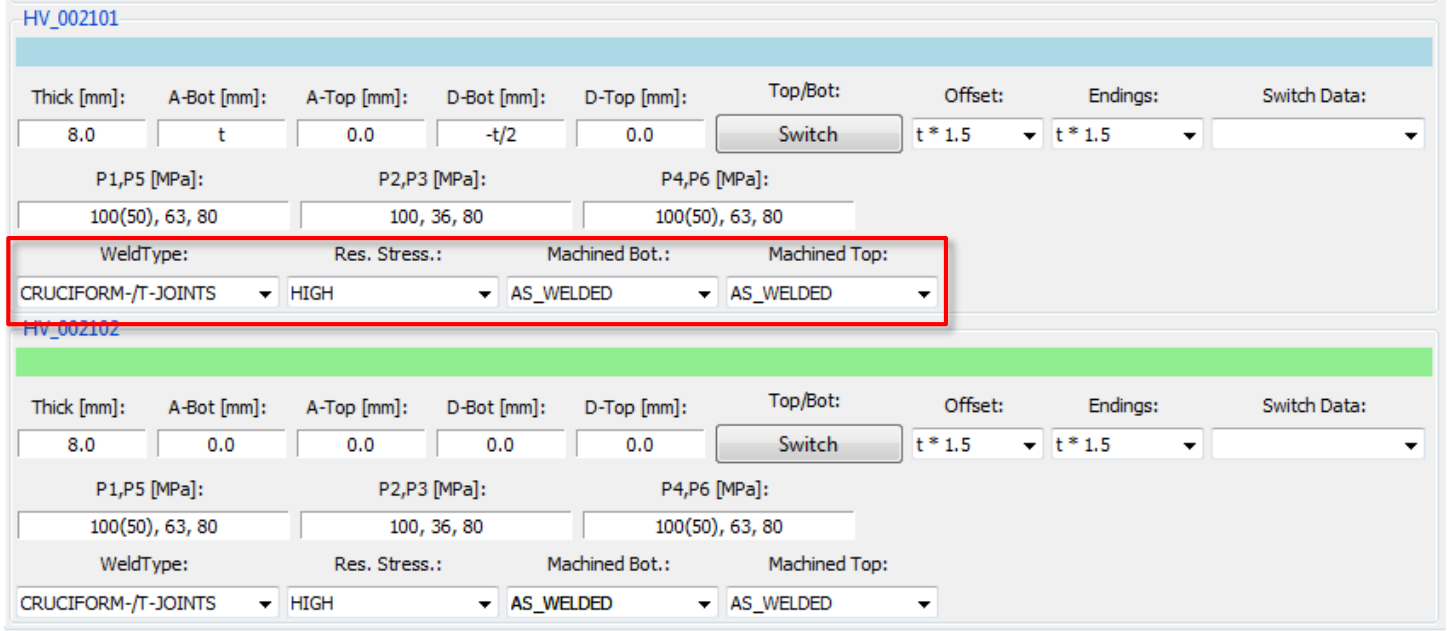

FKM 6th edition

- FKM - Popular because of „Completeness“
  - Base material + Weldings
  - Static + Fatigue loading
    - Infinite life fatigue
    - Finite life Fatigue
  - Nominal / Structural /
    - Nenn / Struktur / Kerbspannung
  - Steel + Aluminum
    - Large material library (based on formulas)

Demanding but serves Options

allows lightweight design

Comparison

- Comparison
  - Fillet weld
  - R = -1

Zulässige Spannungen lt. Norm, Kehlnaht, Wechselbeanspr.								
	LW	wurzelseitig	Nicht wurzels.	Quer durchg.	Längs	Schub	Sicherheit	Überlebenswahr-scheinlichkeit
DIN15018	2 Mio	38	64	64	106	51	4/3	90%
DIN15018	**5 Mio**	**27**	**45**	**45**	**75**	**36**	4/3	90%
DVS952	(2 Mio)	40	50	40	65	51	inkl Sich.=1.5	50%
DVS952	(2 Mio)	40	50	40	65	51	Ohne.Sicherh	90%
DVS952	**(5 Mio)**	**29**	**37**	**29**	**48**	**42**	inkl Sich.=1.5	50%
Hobbacher	2 Mio	22,5	50	40	45	40	k.A.	95%
Hobbacher	**5 Mio**	**17**	**37**	**29**	**33**	**33**	k.A.	95%
FKM	2 Mio	22	47	37	42	34	inkl Sich.=1.5	95%
FKM	**5 Mio**	**16**	**34**	**28**	**31**	**29**	inkl Sich.=1.5	95%
EC3	2 Mio	18	40	40	50	40	Ohne Sicherh.	95%
EC3	**5 Mio**	**13**	**29,5**	**29,5**	**37**	**29,5**	Ohne Sicherh	95%
EC3	**10 Mio**	**11,5**	**25,5**	**25,5**	**32**	**25,5**	Ohne Sicherh	95%
(EC3_10^7)/(DV_2*10^6)		**0,3**	**0,5**	**0,6**	**0,5**	**0,5**		

Weldings

- Choosing right assessment class
- „Heiteres Kerbfall raten“

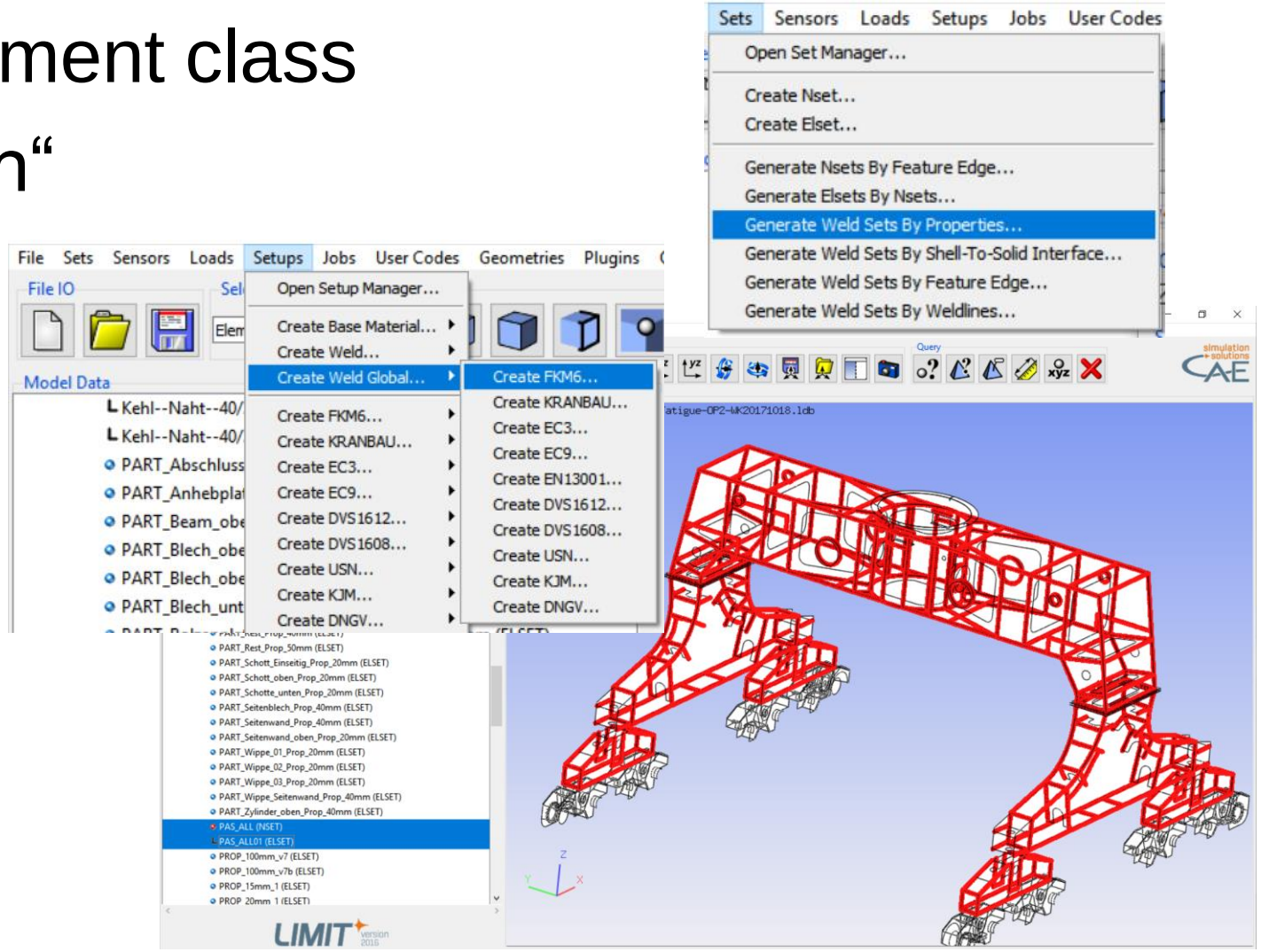

HV weld, transition in thickness

No.	Structural detail	Description	FAT Steel	FAT Al	
300	Longitudinally loaded welds				
313	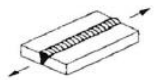	Longitudinally loaded butt weld, without stop/start positions, NDT, with stop/start positions.	100 90	40 36	**P1 – P6**
200	Butt welds, transversely loaded				
222	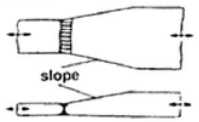	Transversely loaded butt weld made in shop, welded in flat position, weld profile controlled, NDT, with transition in thickness and width, ✧1 slope 1:5 slope 1:3 slope 1:2 Some misalignment is already allowed for by the fatigue class.	90 80 72	32 28 25	**P1, P5, P4, P6**
215		Transversely loaded butt weld on permanent backing bar, root crack. ✧2	71	25	**P3**

Table 5.4.2 Fatigue classes for nominal stress (shear stress), according to *Hobbacher* /13/

No.	Structural detail	Description	FAT Steel	FAT Al	
1	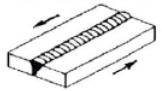	Full penetration butt welds.	100	36	**P1 – P6**

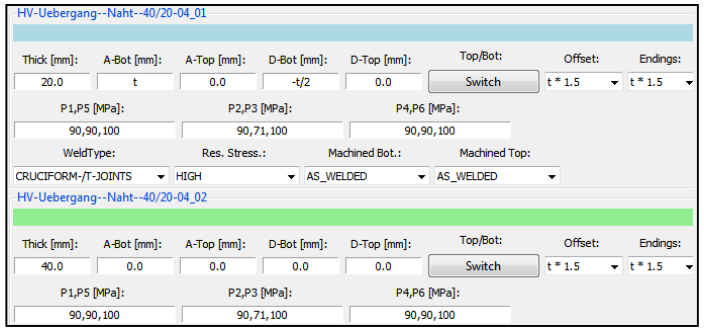

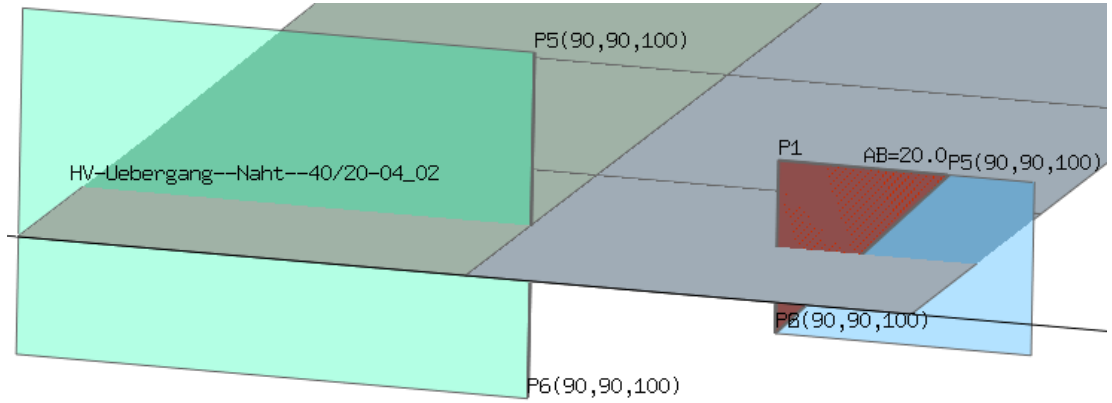

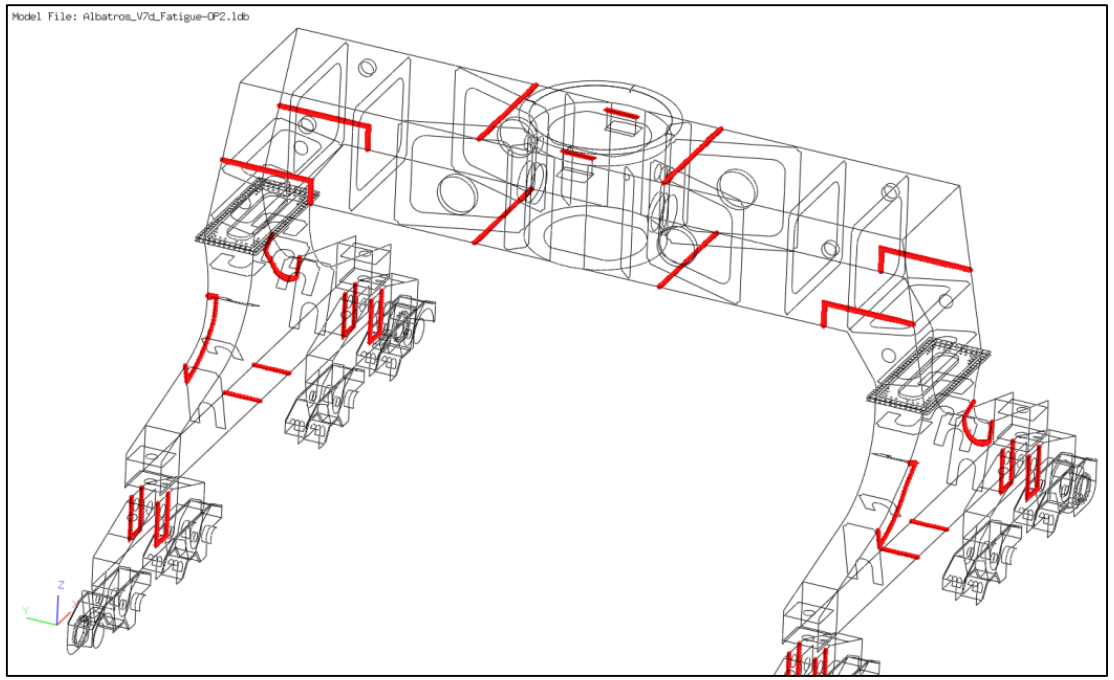

double fillet weld

No.	Structural detail	Description	FAT Steel	FAT Al	
300	Longitudinally loaded welds				
323	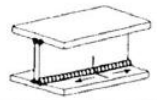	Continuous manual longitudinal fillet or butt weld (based on stress range in flange).	90	36	P1 – P6
500	Non-load carrying attachments				
521	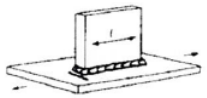	Longitudinal fillet welded gusset at length l L ≤ 50 mm 50 mm < L ≤ 150 mm 150 mm < L ≤ 300 mm 300 mm < Ll gusset near edge: see 525 "flat side gusset".	 80 71 63 50	 28 25 20 18	(P1 – P6)
400	Cruciform joints and/or T-joints				
413	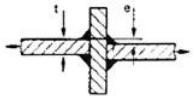	Cruciform joint or T-joint, fillet welds or partial penetration K-butt welds, no lamellar tearing, toe crack. Misalignment e < 0.15 · t, No misalignment.	 63 71	 22 25	P1, P5, P4, P6
414	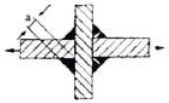	Cruciform joint or T-joint, fillet welds or partial penetration K-butt welds including toe ground joints, root crack. Analysis based on stress in weld σ = F/Σ(a · l) l length of the weld joint for a/t ≤ 1/3 t sheet metal thickness	 36 40	 12 14	P3

Table 5.4.2 Fatigue classes for nominal stress (shear stress), according to *Hobbacher* /13/

No.	Structural detail	Description	FAT Steel	FAT Al	
2	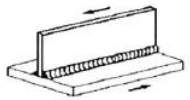	Fillet welds, partial penetration butt welds.	80	28	P1 – P6

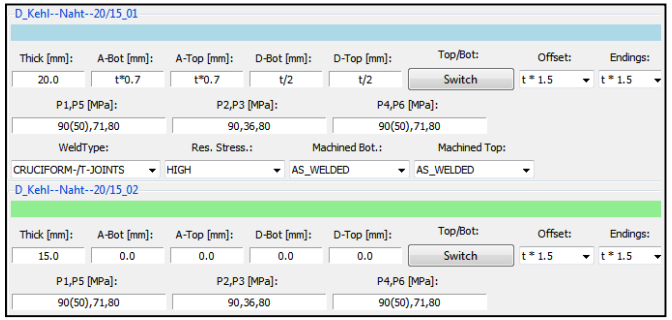

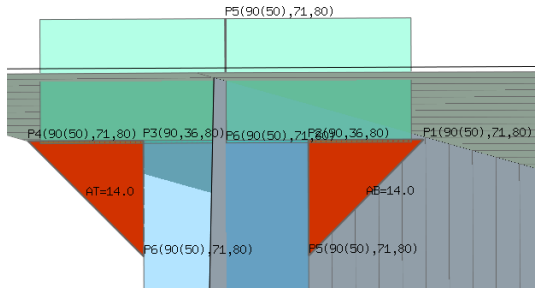

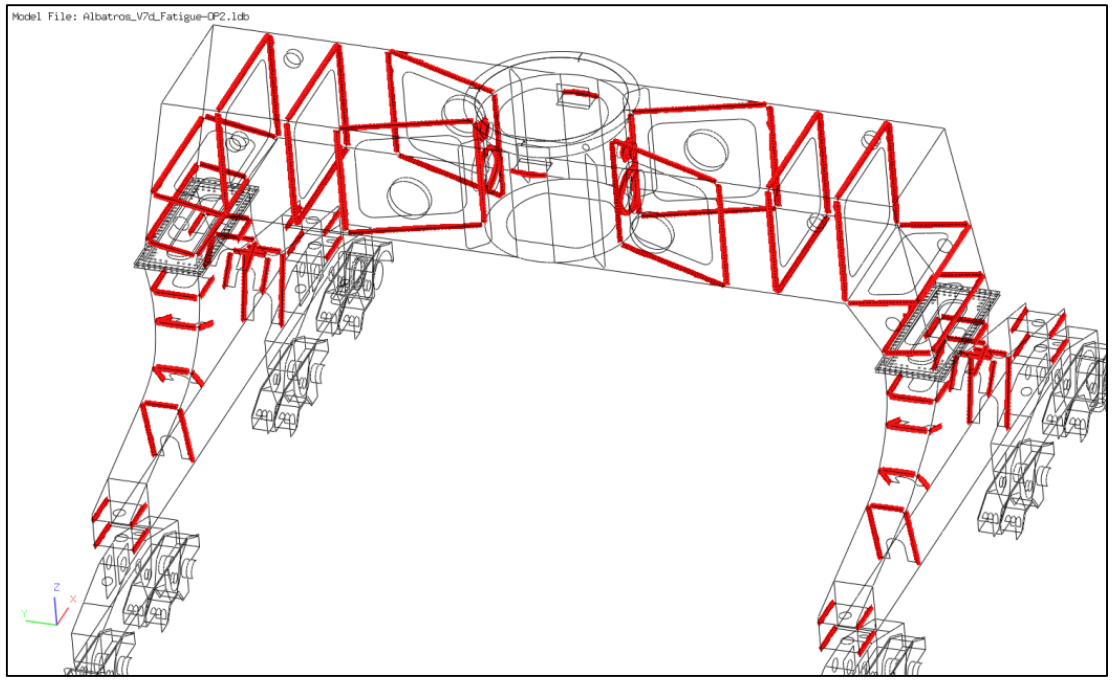

HV + double fillet weld + double fillet weld

No.	Structural detail	Description	FAT Steel	FAT Al	
300	Longitudinally loaded welds				
323	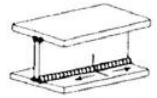	Continuous manual longitudinal fillet or butt weld (based on stress range in flange).	90	36	P1 – P6
500	Non-load carrying attachments				
521	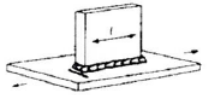	Longitudinal fillet welded gusset at length l L ≤ 50 mm 50 mm < L ≤ 150 mm 150 mm < L ≤ 300 mm 300 mm < Ll gusset near edge: see 525 "flat side gusset".	 80 71 63 50	 28 25 20 18	(P1 – P6)
400	Cruciform joints and/or T-joints				
413	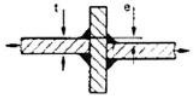	Cruciform joint or T-joint, fillet welds or partial penetration K-butt welds, no lamellar tearing, toe crack. Misalignment e < 0.15 · t, No misalignment.	 63 71	 22 25	P1, P5, P4, P6
414	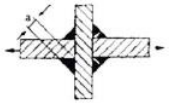	Cruciform joint or T-joint, fillet welds or partial penetration K-butt welds including toe ground joints, root crack. Analysis based on stress in weld σ = F/Σ(a · l) l length of the weld joint for a/t ≤ 1/3 t sheet metal thickness	 36 40	 12 14	P3

Table 5.4.2 Fatigue classes for nominal stress (shear stress), according to *Hobbacher* /13/

No.	Structural detail	Description	FAT Steel	FAT Al	
2	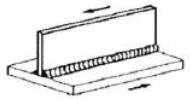	Fillet welds, partial penetration butt welds.	80	28	P1 – P6

double fillet weld defintion → worst case

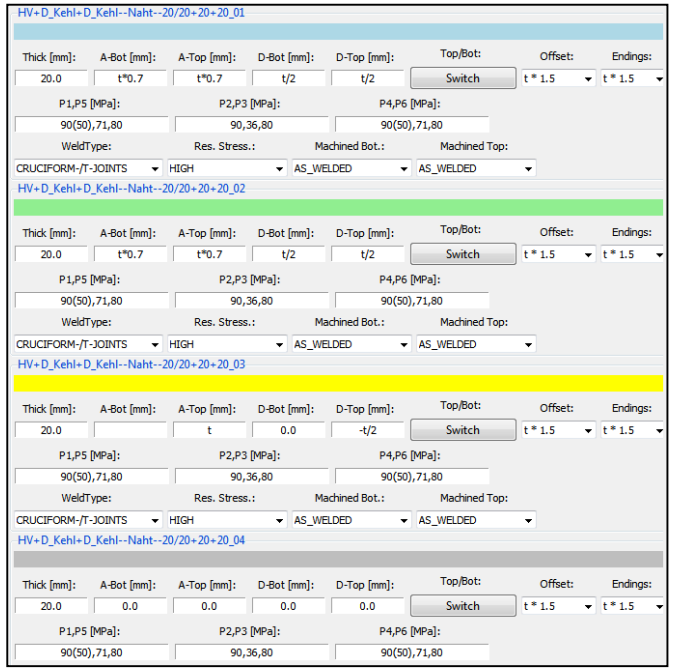

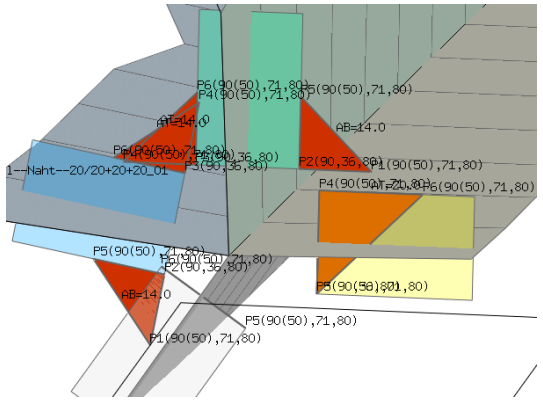

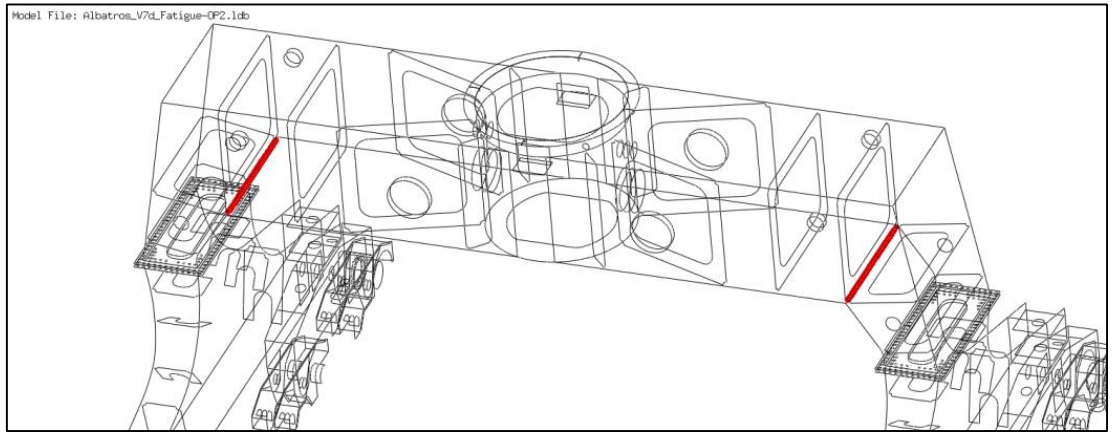

Fatigue evaluation – Lebensdauer – 360 Degrees – LIMIT

scale to 5.0 (max)
→ welds overloaded according to FKM 6th under current load assumptions

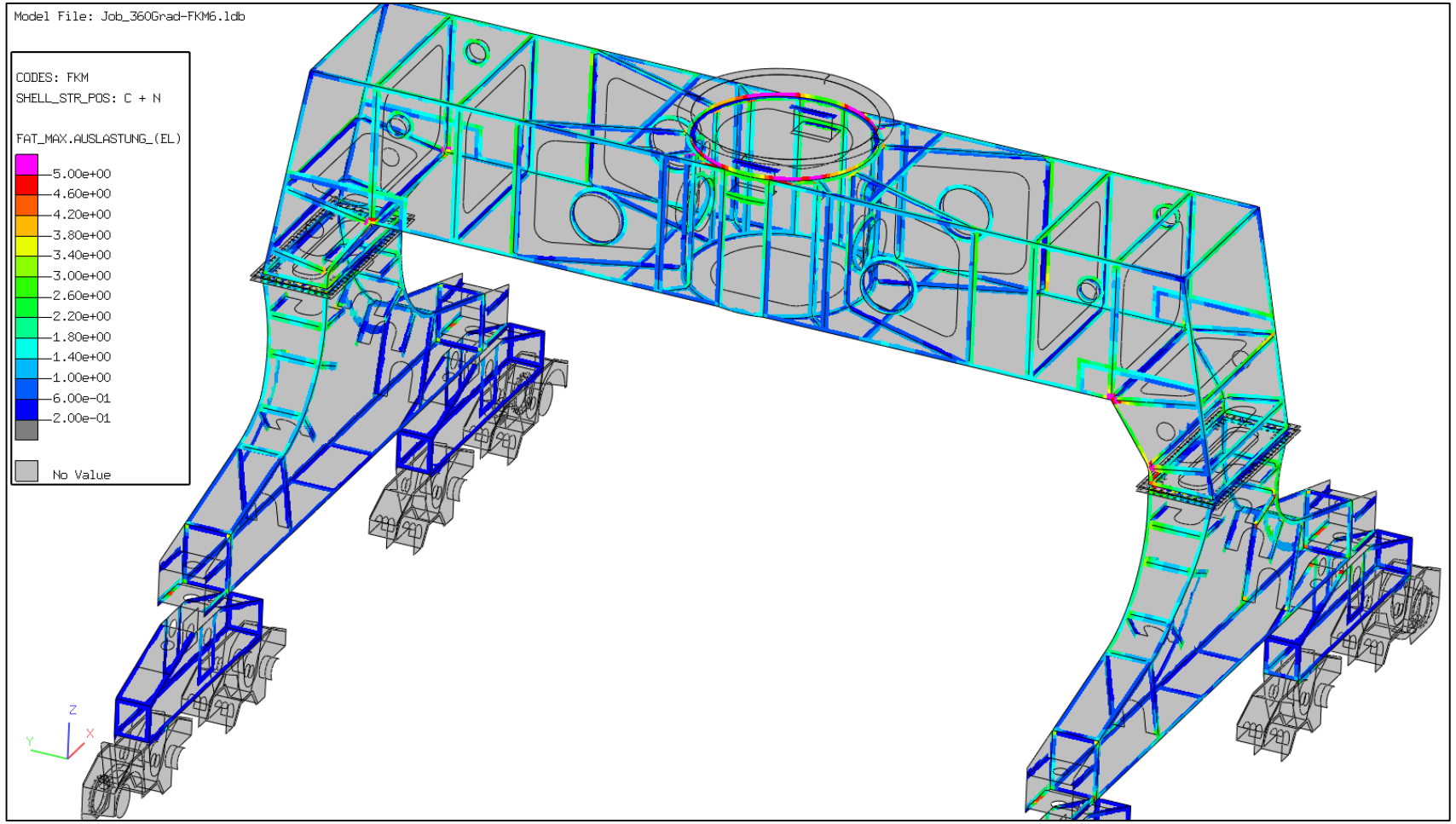

Fatigue evaluation – Lebensdauer – 180 Degrees – LIMIT

scale to 5.0 (max)
→ welds overloaded according to FKM 6th under current load assumptions

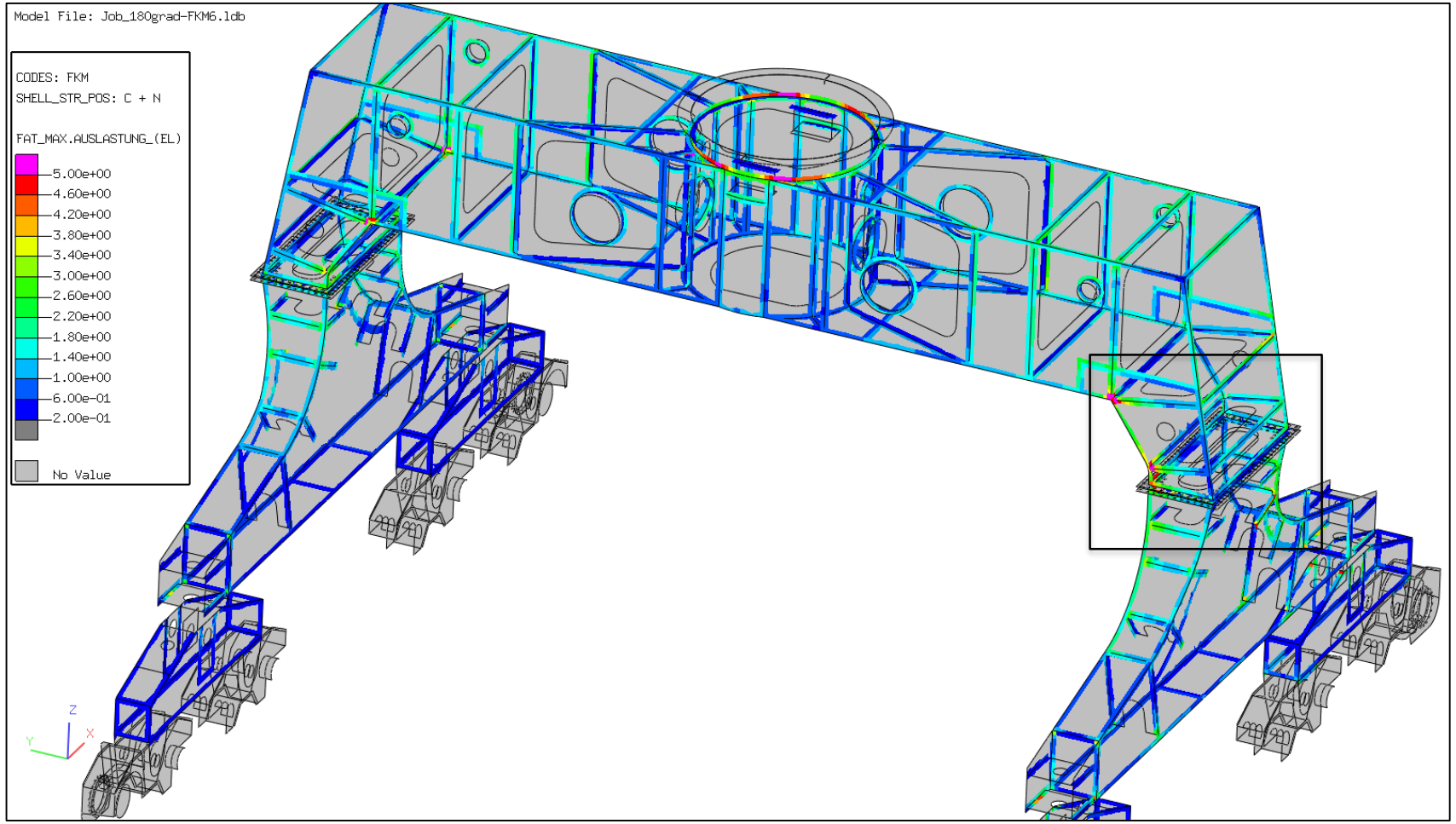

LIMIT version 2017

Fatigue evaluation – Lebensdauer – 180 Grad – LIMIT

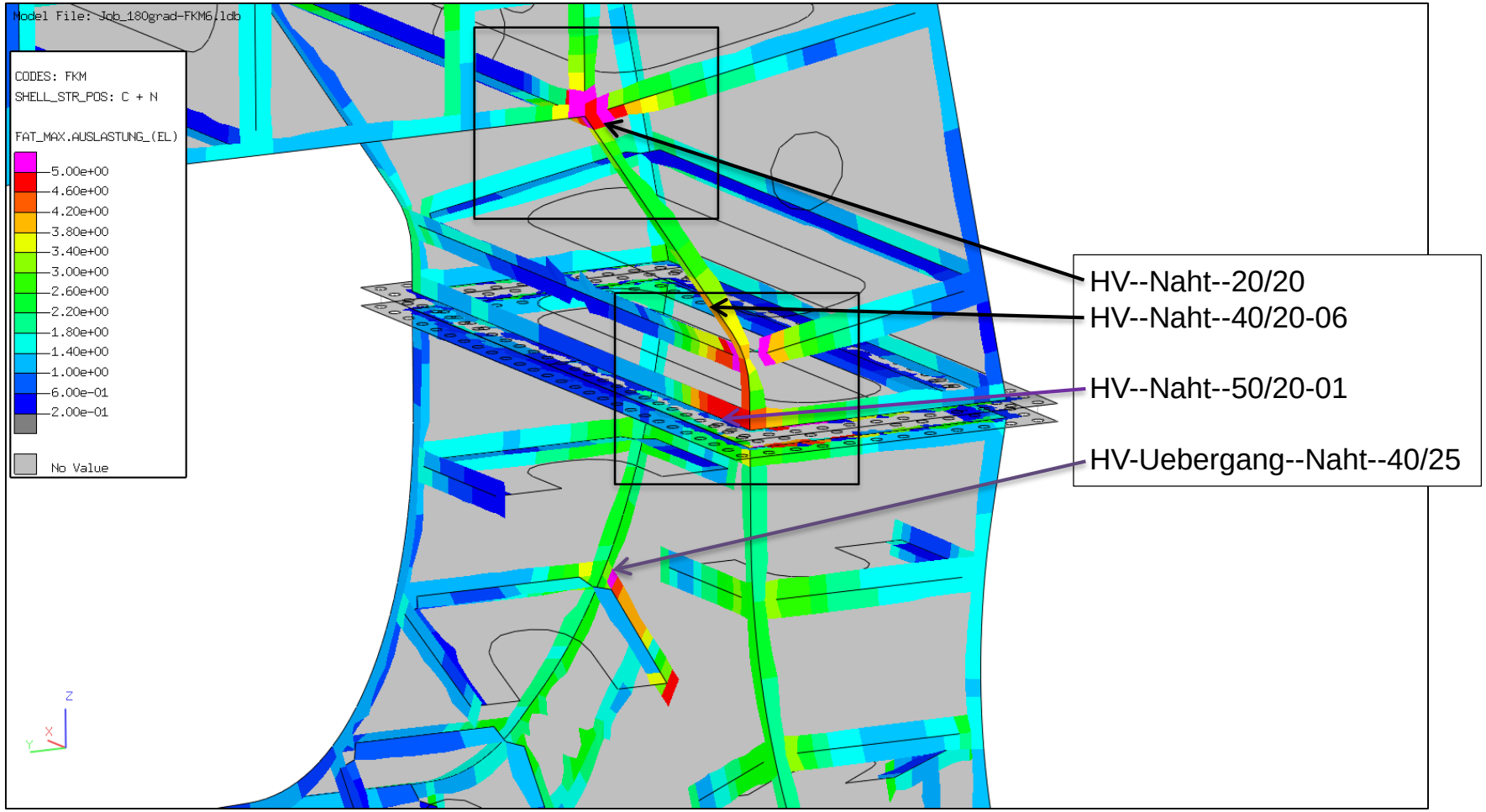

Fatigue evaluation – 180 Grad – LIMIT

Query function

Node + Max.Auslastung
weld set name
between these Loadcases
which Point and FAT-number

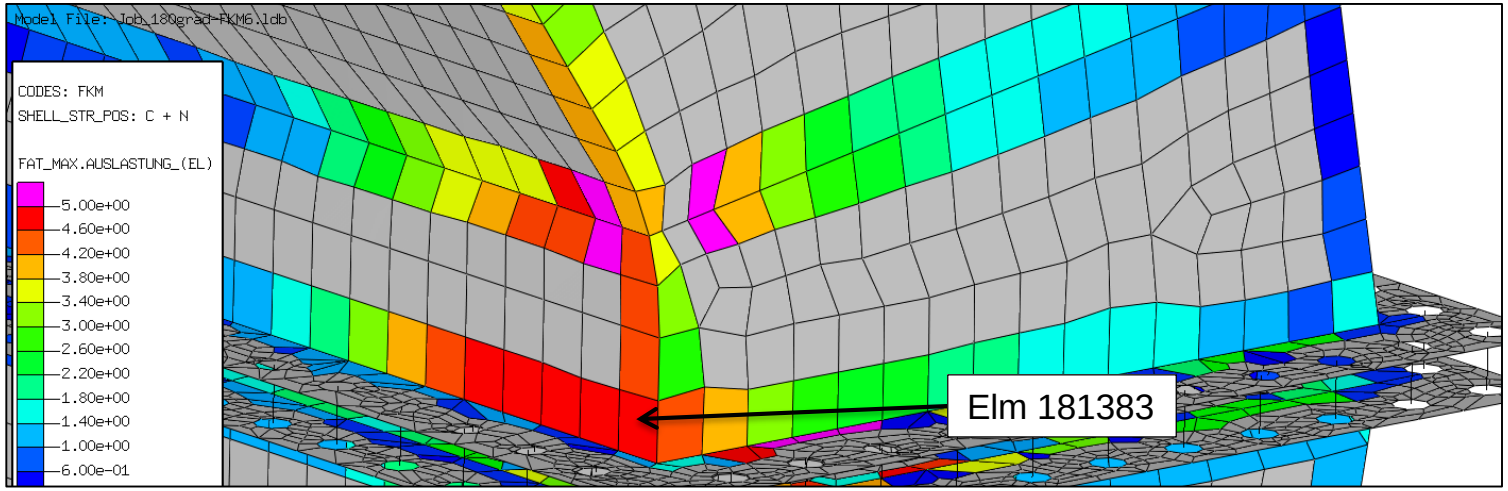

Element Id: 181383; Elset(s): HV--Naht--40/20-06_01, HV--Naht--50/20-01_01, _A_20.0__D_-10.0__ESN, _T_20.0__ESN_A_20.0__D_-10.0Results for FAT_MAX.AUSLASTUNG:
--
Node 259344: 3.6115 -> Set: HV--Naht--50/20-01_01_
LCs:(LOAD_LC_UEBERLAGERUNG_LEBENSDAUER_0GRAD)<>(LOAD_LC_UEBERLAGERUNG_LEBENSDAUER_180GRAD)
P1__1(FAT90/FAT80/FAT80)__2(FAT90/FAT71/FAT80)__5(FAT90/FAT80/FAT80)
Node 272523: 0.2 -> Set: not_analyzed
Node 269223: 3.9334 -> Set: HV--Naht--40/20-06_01_
Node 259328: 4.7475 -> Set: HV--Naht--50/20-01_01_
LCs:(LOAD_LC_UEBERLAGERUNG_LEBENSDAUER_0GRAD)<->(LOAD_LC_UEBERLAGERUNG_LEBENSDAUER_180GRAD)
P1__1(FAT90/FAT80/FAT80)__2(FAT90/FAT71/FAT80)__5(FAT90/FAT80/FAT80)

Summary

- clearify the assessment needs - at the beginning
  - Static assessment
  - Fatigue assessment
- Loading situation
  - According to specific industrial sector
  - Often not defined in SME
- Material usage
  - Changing material S235 → S355 → S550
  - e.g. EC3 and DVS1612 no higher allowables than S355

Summary

- Combination of different regulations often useful
  - Choose carefully
  - Hint for SME:
  - discuss with regulatory authority in advance

Tabelle 4-1: Dokumente zur Nachweisführung

	Statischer Nachweis	Dauerfestigkeits-nachweis	Betriebsfestigkeits-nachweis
Grundmaterial Stahl	FKM-Richtlinie [8]	FKM-Richtlinie	FKM-Richtlinie
Grundmaterial Aluminium	FKM-Richtlinie DVS 1608 [21]	FKM-Richtlinie DVS 1608	FKM-Richtlinie DVS 1608
Schweißnähte Stahl	FKM-Richtlinie	FKM-Richtlinie IIW-Empfehlungen [22] DVS 1612 [23]	FKM-Richtlinie IIW-Empfehlungen
Schweißnähte Aluminium	FKM-Richtlinie DVS 1608	FKM-Richtlinie DVS 1608 IIW-Empfehlungen	FKM-Richtlinie DVS 1608 IIW-Empfehlungen

  - Nachweisführung gemäß VDV 152 Ausgabe 2016-10-01

Summary

- Thank you for your attention

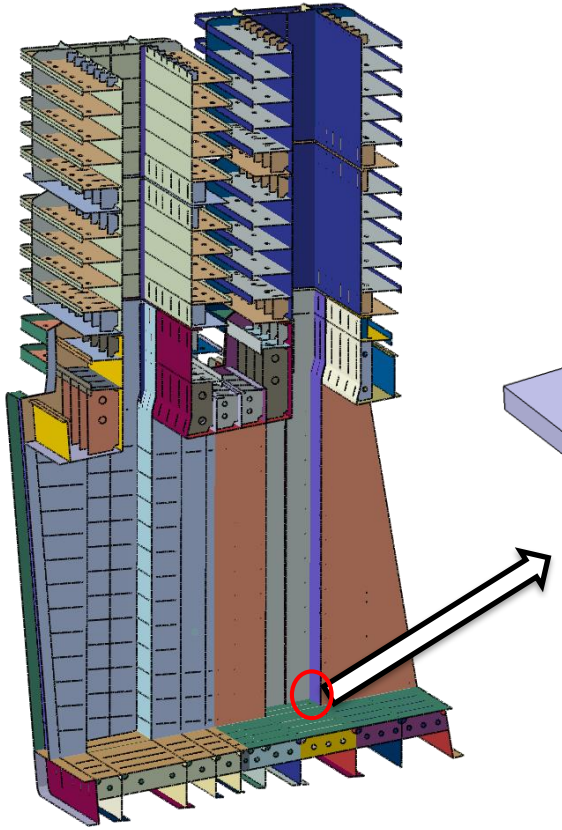

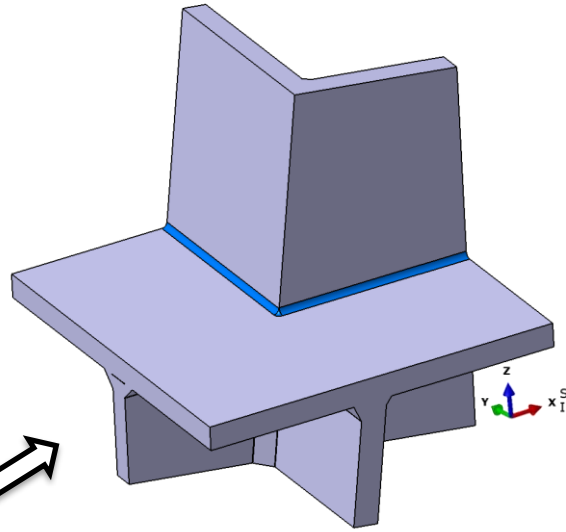

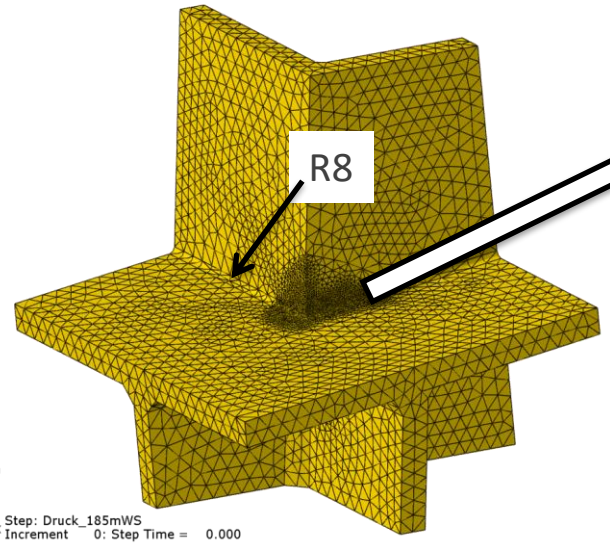

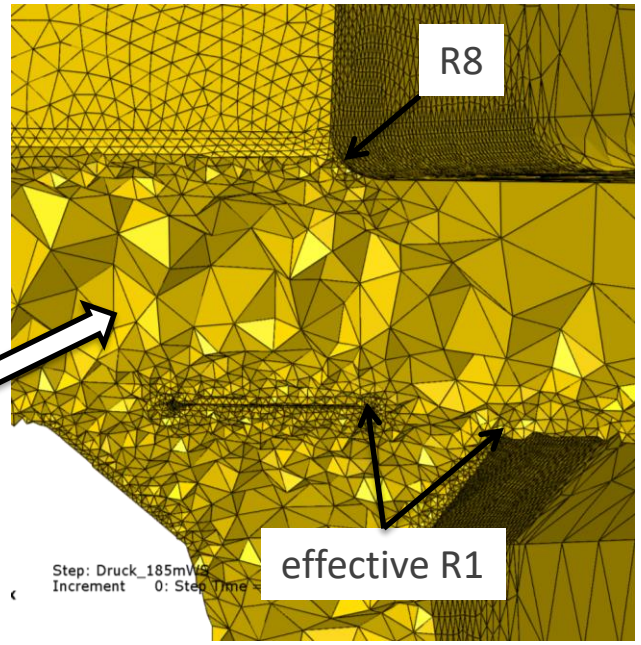

http://cae-sim-sol.com